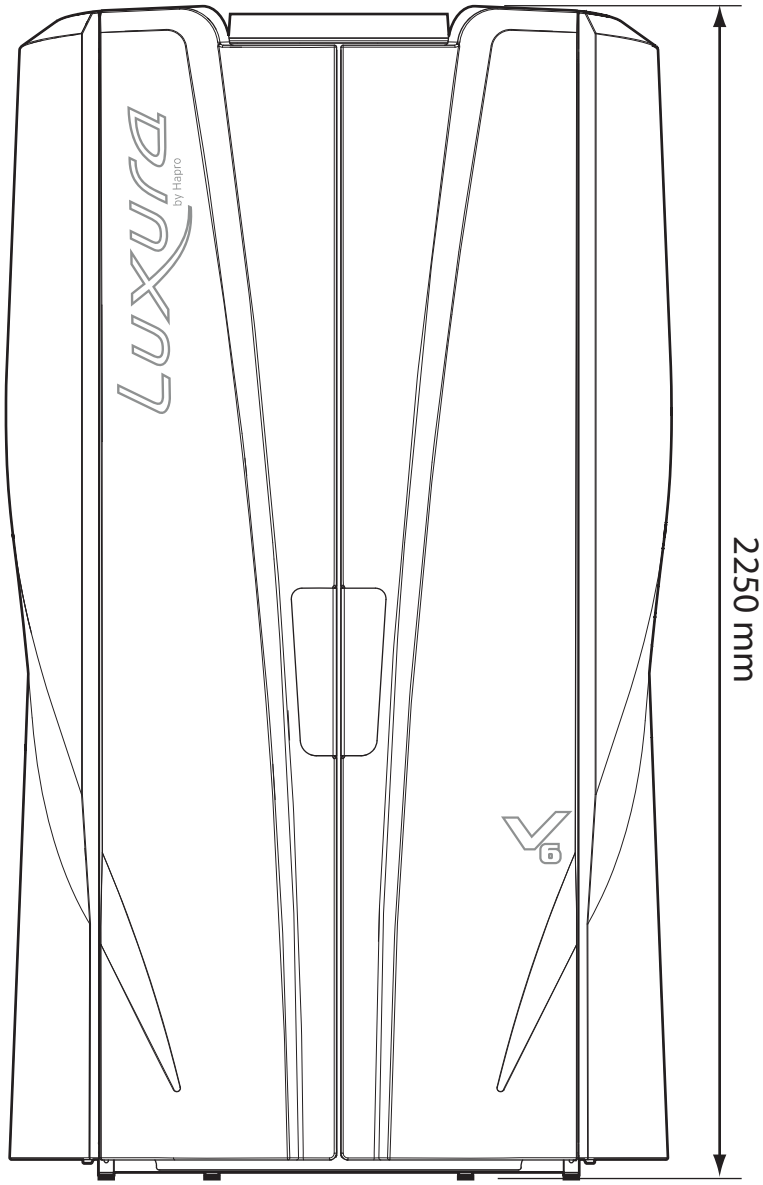
Luxura
by Hapro
2250 mm

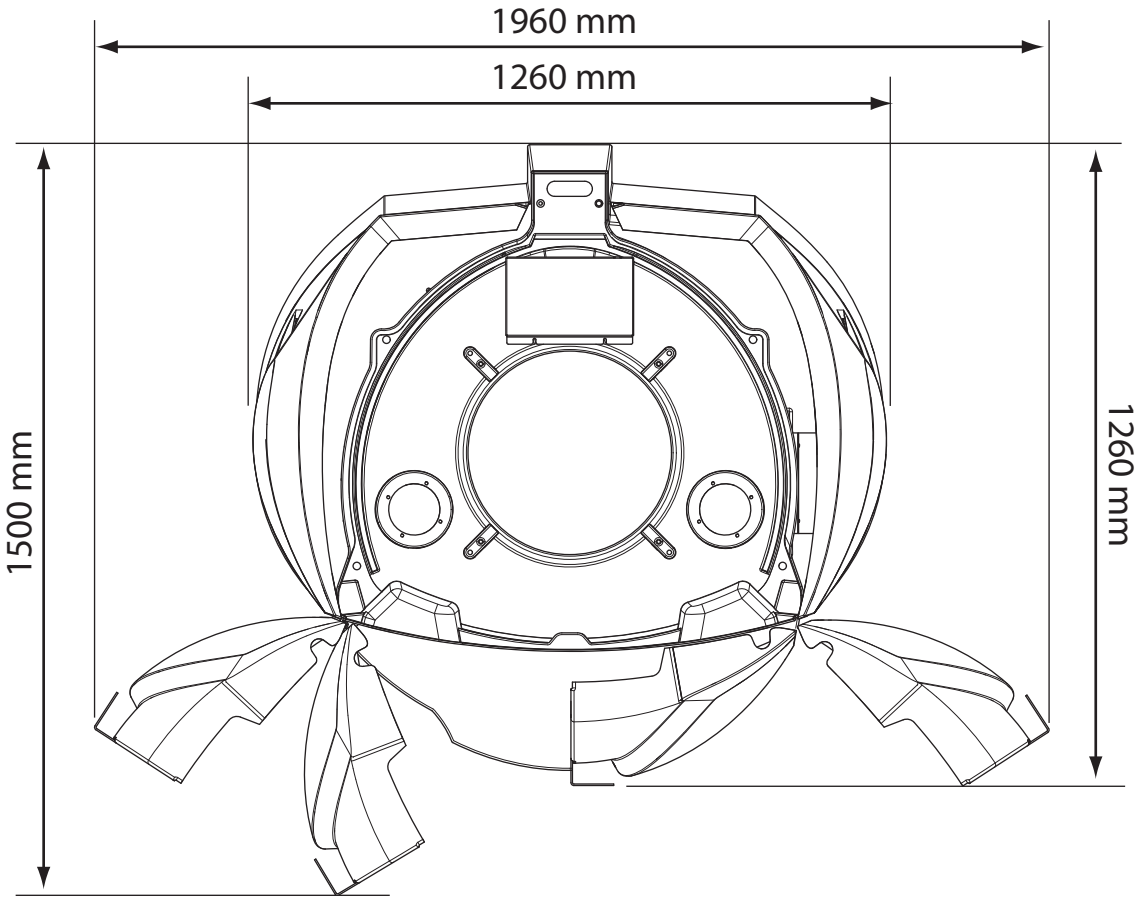
1960 mm
1260 mm
1500 mm
1260 mm